TECHINCAL DETAILS

OF

FABRIC EXTENSIOMETER™

1. INTRODUCTION

PARAMOUNT FABRIC EXTENSIOMETER™ is used to determine the stretch & recovery of the fabric in case of both woven & knitted fabrics. A very useful Equipment to evaluate the Stretch & Recovery of woven, Knitted / Elastic or Lycra Fabric. It gives the percentage of stretch directly. The fabric can be loaded with weight from 1 to 5 Kg. The dead weights 2 Kg. (2 Nos.) and 1 Kg. (1 No.) are provided with the Extensiometer to load the fabric.

2. EQUIPMENT

PARAMOUNT FABRIC EXTENSIOMETER™ is made of Stainless Steel except the base and scale. This instrument is used to determine the stretch & recovery of textile fabrics. The apparatus consist of one fixed jaw & a moving jaw for fabric clamping, loading device and fine lead screw. The unit has an arrangement to provide tension by applying the load with a constant rate of extension. The Tightening Knobs (SS) are provided to clamp the sample in the jaws without slippage. The specially designed scale graduated in two scales, 0-50% & 0-300% for showing the stretch % for woven & knitted fabrics respectively is provided.

3. SALIENT FEATURES

- Specially developed equipment to evaluate stretch or extension of woven & knitted fabrics.
- Stretch or extension percentage can be directly evaluated from the scale.
- Two Scale graduated, 0-50% for woven fabrics & 0-300% for knitted fabrics.
- Stainless steel knobs for tightening the jaws for holding samples.
- Smooth, precision-engineered components for exceptional performance.
- Complete withal accessories-two dead weight 2kg & one dead weight 1kg.
- Supplied with calibration & inspection certificates.

4. DETAILS OF THE MAIN UNIT OF FABRIC EXTENSIOMETER™

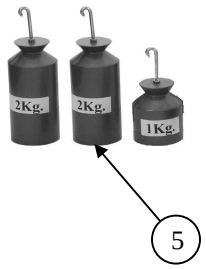

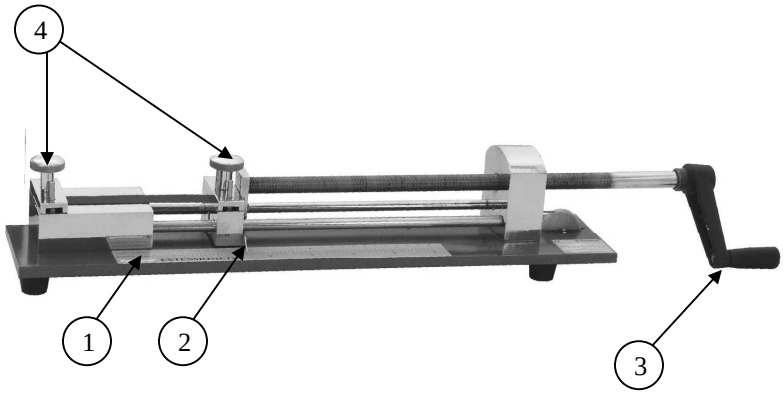

1. Graduated Scale to check the stretch & recovery readings.
2. Pointer Indicator.
3. Handle for operation.
4. Tightening knobs for Specimen Fixing Jaws.
5. Dead Weight (3 Nos.)

5. DETAILS OF THE ACCESSORIES SUPPLIED WITH FABRIC EXTENSIOMETER™

Main Unit

Dead Weight (2 Kg.)
02 Nos.

Dead Weight (1 Kg.)

Paramount® Since1964
An ISO 9001 : 2000 Group
Your Quality, Our Obsession.™

This User's Manual

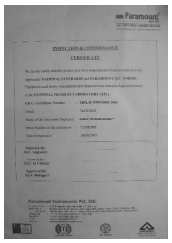

Calibration & Inspection Conformance Certificate

FABRIC EXTENSIOMETER™ is Supplied Complete with below Accessories:

Main Unit	:	01 No.
Dead Weight (1 Kg)	:	01 No.
Dead Weight (2 Kg.)	:	02 Nos.
This User's Manual	:	01 No.
Calibration & Inspection Conformance Certificate	:	01 No.

6. TECHNICAL DETAILS OF FABRIC EXTENSIOMETER™

Clamping width of Jaw	:	10 mm
Size of Specimen Woven	:	220 (L) x 70 mm (W)
Size of Specimen Knitted	:	95 (L) x 70 mm (W)
Scale Reading Woven Fabric	:	0 – 50 %
Scale Reading Knitted	:	0 – 300 %
Dead Weight	:	2 Kg. (2 Nos.)
		1 Kg. (1 No.)
Overall Dimensions of the Instrument	:	650 (L) x 130 (W) x 165 mm (H)
		25.5” (L) x 5” (W) x 6.5” Inch. (H)
Weight	:	11.5Kgs (25.20lbs)

7. RELATED STANDARD

BS 4294

NOTE : With our constant endeavour to improve & excel, we reserve the right to alter the specification or modify the appearance without notice.